EXPLODED VIEWS

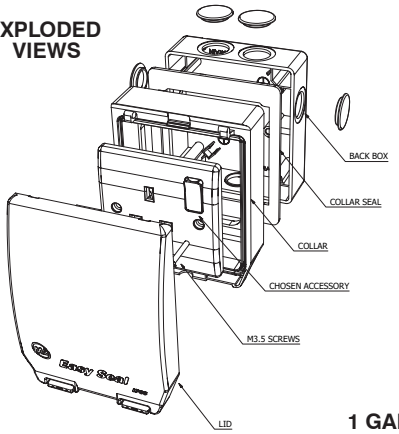

1 GANG

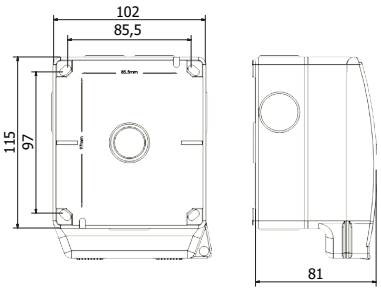

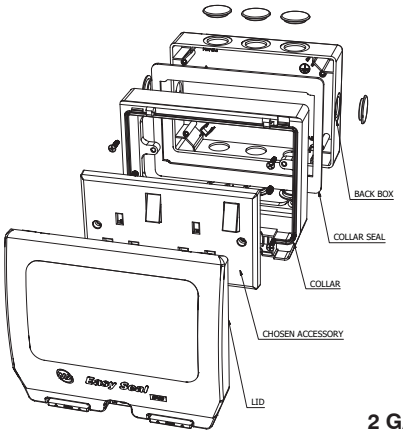

2 GANG

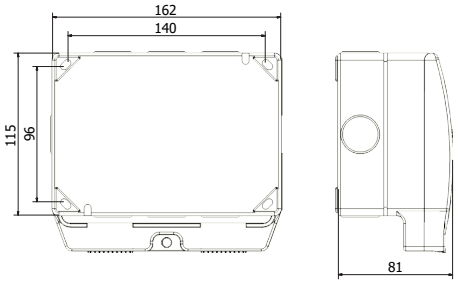

DISCLAIMER

This Product is designed for domestic and light commercial use only. It must be installed in accordance with the fitting instructions. It should be fixed in the approved and conventional way to a solid or suitably stable surface. The equipment should be connected to a mains supply of the appropriate voltage (indicated on the product). These enclosures have been tested to IP66 without cable for the protection against the ingress of water and fine particles of dust. Depending upon the nature of the accessory product fitted and associated appliance flexes used, the IP rating may be compromised. If unsure please contact our sales office for further advice.

If you are unsure consult a qualified electrician before fitting. No liability can be accepted if this product is installed or used in any other way.

CAUTION
DO NOT USE CHEMICAL AGENTS OR SOLVENTS ON THIS PRODUCT

M2 | weatherproof

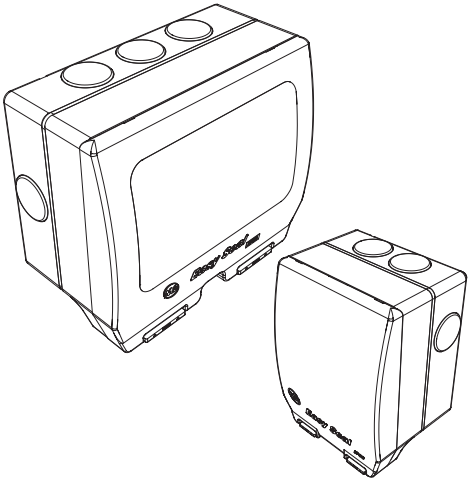

weatherproof

IP66
ENCLOSURE

INSTALLATION INSTRUCTIONS

- Please read all instructions before starting the installation.
- Before starting any electrical work always ensure that the mains supply is switched off, or isolated from the area in which you are working.
- It is a requirement that any electrical installation for “Mains” supply in the garden must be protected by an RCD (Residual Current Device) with a trip current not greater than 30mA.

INSTALLATION

1. Ensure that the mounting surface is flat and free from loose particles.
2. To fit enclosure open lid and remove collar from the back box by loosening the four screws.
3. Where there is a likelihood of any future condensation take the back box and drill a small hole through the area marked “**drain**” that will be the lowest point when mounted.
4. Please refer to the fixing centres of the back box and secure to the wall surface using the four corner holes.
5. The 20mm cable entry covers are removed by pushing from the inside of the back box. Connect up using suitable conduit fittings and supply cables.
6. Screw down the collar onto the back box ensuring the sponge collar seal is in position between the base and the collar.
7. Install electrical accessory of your choice referring to manufacturer’s instructions where necessary. Ensure all cables are correctly positioned and tightened within terminals.
8. Secure accessory into the collar using M3.5mm screws supplied with the accessory.
9. Reconnect supply and test.

IF IN DOUBT, CONSULT A QUALIFIED ELECTRICIAN.

M2 Electrical,
Pipers Road,
Park Farm Industrial Estate,
Redditch, Worcs.
B98 0HU.
Tel: 0044 (0)1527 528024
Fax: 0044 (0)1527 520236
www.m2electrical.co.uk

bsi. ISO 9001:2015 Quality Management FS 644545

UK CA CE