EXPLODED VIEWS

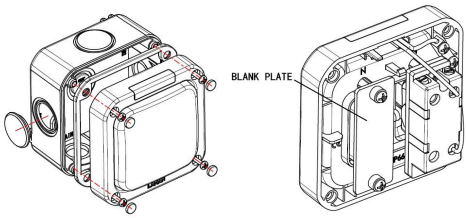

Fig 1.

1 GANG SWITCH ONLY

FIXING CENTRES BACK BOX

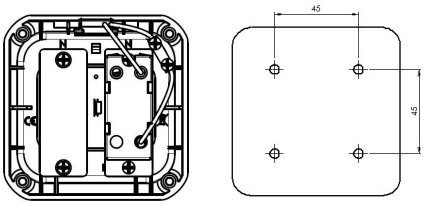

Fig 2.

ALL DIMENSIONS IN mm

NEON USE OPTIONS

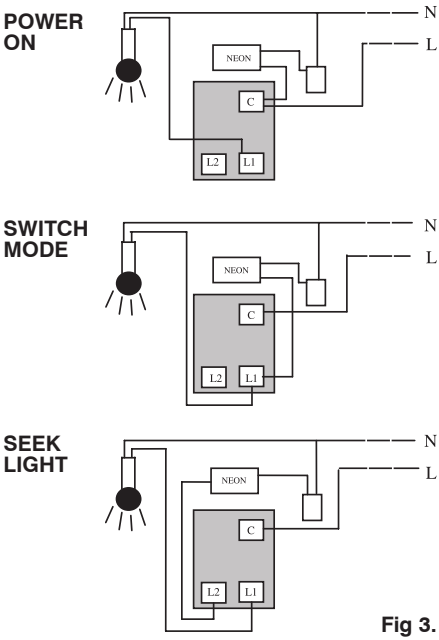

Fig 3.

DISCLAIMER

This product is designed for domestic and light commercial use only. It must be installed in accordance with the fitting instructions. It should be fixed in the approved and conventional way to a solid or suitably stable surface. The equipment should be connected to a mains supply of the appropriate voltage (indicated on the product).
If you are unsure consult a competent person before fitting. No liability can be accepted if this product is installed or used in any other way.

CAUTION
DO NOT USE CHEMICAL AGENTS OR SOLVENTS ON THIS PRODUCT

M2 | weatherproof

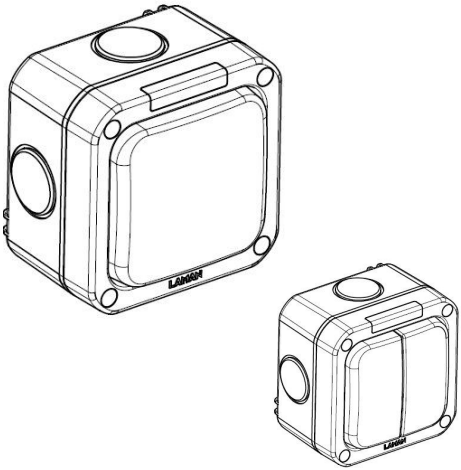

weatherproof

IP66

INSTALLATION INSTRUCTIONS

- Please read all instructions before starting the installation.
- Before starting any electrical work always ensure that the mains supply is switched off, or isolated from the area in which you are working.
- It is a requirement that any electrical installation for “Mains” supply in the garden must be protected by an RCD (Residual Current Device) with a trip current not greater than 30mA.

INSTALLATION

1. Ensure that the mounting surface is flat and free from loose particles. Avoid fitting in areas of direct sunlight for any length of time.
2. Unscrew the four screws holding on the front cover assembly. Fig 1.
3. Take the back box and drill a small hole through the drainage point that will be at the lowest point when mounted. This is necessary to ensure that any residual moisture or condensation has an escape route at the back of the box.
4. The fixing centres for mounting the box are shown in Fig 2. Use a suitable drill / wall plug for the surface on which you are mounting your Easy Seal enclosure and use No.8 countersunk screws (not supplied) to secure the back box through the 4 corner holes.
5. Remove one of the cable entry covers by pushing through from the inside of the back box. If circumstances permit the best entry point for the supply cable is one on the bottom side.
6. Cable entry can be made via conduit & fittings.
7. Use only mains cable of sufficient rating for your application.
8. The neon indicator can be used to illuminate the switch in a number of ways depending on wiring, & the presence of a neutral supply. See Fig 3.
9. Connect wires to the correct terminals and ensure all are screwed tight. Ensure all wires are not overly stretched or pinched.
10. Re-secure the front cover assembly with the four screws and fit the plastic cap covers.

IF IN DOUBT, CONSULT A QUALIFIED ELECTRICIAN.

M2 Electrical,
Pipers Road,
Park Farm Industrial Estate,
Redditch, Worcs.
B98 0HU.
Tel: 0044 (0)1527 528024
Fax: 0044 (0)1527 520236
www.m2electrical.co.uk

bsi. ISO 9001:2015 Quality Management FS 644545

UK CA CE